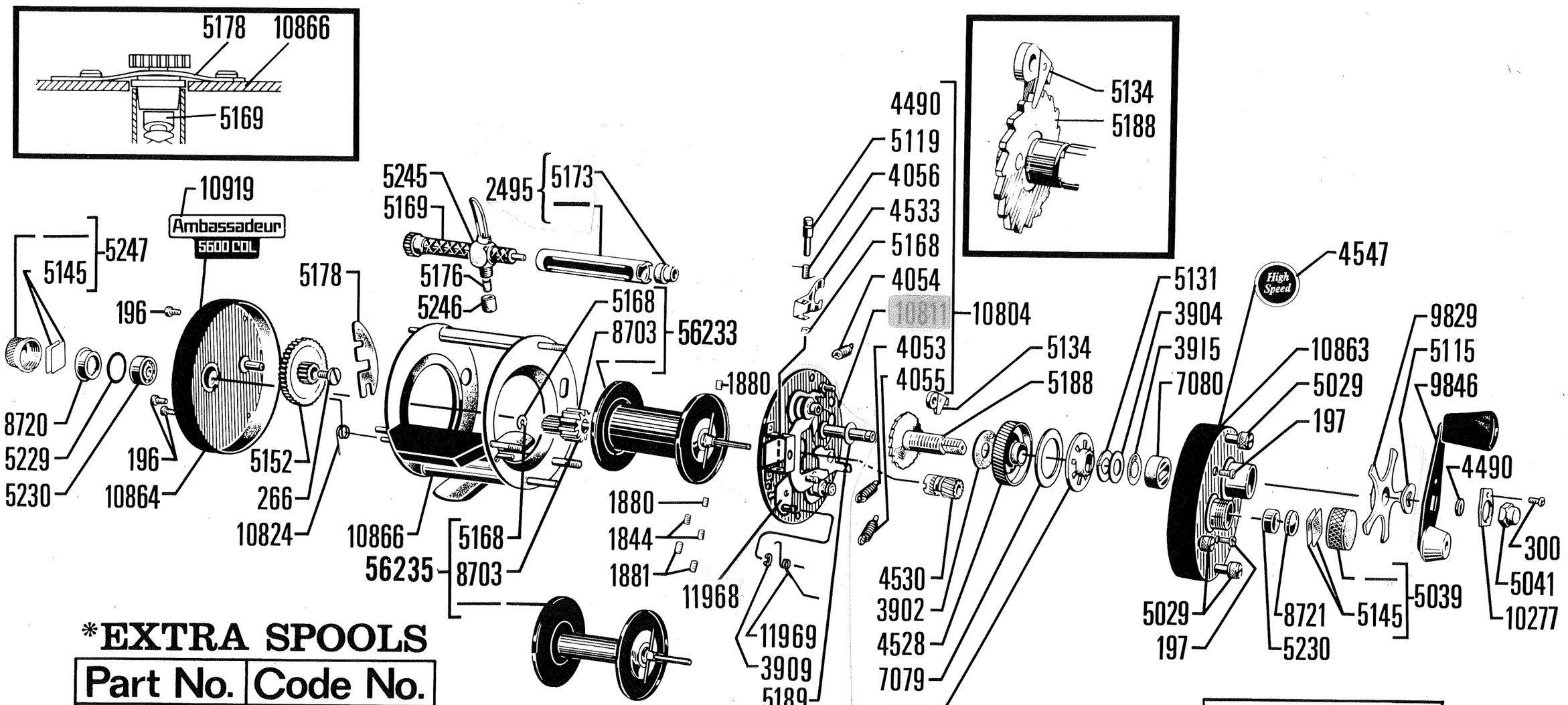


## *EXTRA SPOOLS

| Part No. | Code No. |
|---|---|
| 4037 | 56233 |
| 4534 | 56235 |

**5600 CDL**

77 08 00